safe-t

SAFE-T DUAL QC ROTARY STEERING

APPLICATIONS

Virtually all power-assisted sterndrive boats. Safe-T Dual QC® replaces all SeaStar Solutions Safe-T helms made since 1968 with little or no dash modifications. (Requires use of SSC62 QC or SSC61 QC II steering cable.)

For single station use only. Safe-T Dual QC accepts wheels up to 16” diameter.

Components are available for dual cable systems, but we recommend No-FeedBack steering for all dual cable steered, non-power-assisted outboards and sterndrives. See the NFB 4.2 Dual

FEATURES

- Quick-response of 3 turns lock-to-lock
- New quick connect feature on both sides of helm allow port side helm mount without need for an adaptor
- Quick connect feature allows both cable and spent travel tube installation without extra tools
- Kits include: cable, helm, 90° bezel and hardware

Issue Date - Nov 2014
Issue Number - ms10

(Steering Wheel not included.)

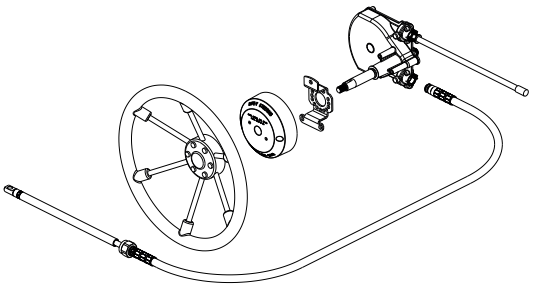

Traditional SeaStar Solutions mechanical steering is still the choice for sterndrives, inboards and other power assisted applications.

It’s just right for power steered boats in which No FeedBack™ systems are not required.

Safe-T® Dual QC offers the quick response of three-turn steering, and easy installation with a patented, no-tools-required cable connection at the helm.

ORDER INFORMATION

COMPLETE SYSTEM	PART NO.
Safe-T Dual QC Steering Kit (single cable) (Kits available in lengths of 8 - 23 ft)	SS137XX
COMPONENTS	
Safe-T QC Single Helm	SH5094-1P
QC Cable	SSC62XX
Safe-T QC Bezel (90°)	SB27484P
OPTIONS	
Safe-T QC Sgl. Tilt Dash Module (Each Kit Includes Tilt Helm & Tilt Mechanism)	SHT91523
Sport Tilt Mechanism	SH91800P
Sport Plus Tilt Mechanism	SH91900P
Safe-T QC Single Tilt Helm	SH91523-1P*
Safe-T QC Bezel (20°)	SB27483P
Cable Gard (fits most tilt tubes)	SA39329P

safe-t

SAFE-T DUAL QC ROTARY STEERING

FEATURES

- Standard 3/4” round tapered steering shaft
- Add optional tilt helm, requires separate tilt mechanism SH91800 or SH91900 for complete installation
- Stainless steel cable output ends
- Meets A.B.Y.C. standards
- Meets N.M.M.A. certification requirements
- Fast, easy installation: uses simple snap-in cable connection, SeaStar Solutions Quick Connect (QC) cable, and industry-standard Safe-T mounting hardware

ORDER INFORMATION

SERVICE ITEMS	PART NO.
QC cable	SSC62XX
Steering Wheel Hardware Kit (Old Par No. 2745417P)	SA27454P
Spent Travel Tube	SA38603P
Hitch Pin for Quick Connect Helms (Old Par No. 2724514P)	SA27245P

XX = Length in feet

** Requires tilt mechanism to complete Tilt Steering system installation.*

† For dual cable. If steering is NOT power-assisted, upgrading to NFB 4.2 Dual Cable is recommended.

DISCLAIMER: This system is only recommended as replacement for the original system as installed by the boat manufacturer. SeaStar Solutions always recommends NFB helms for outboard applications. NFB helms lock out steering loads caused by propeller torque eliminating the driver fatigue normally experienced with a standard helm. Patented SeaStar Solutions steering helms are a drop in replacement for Safe-T systems.

TECHNICAL DATA

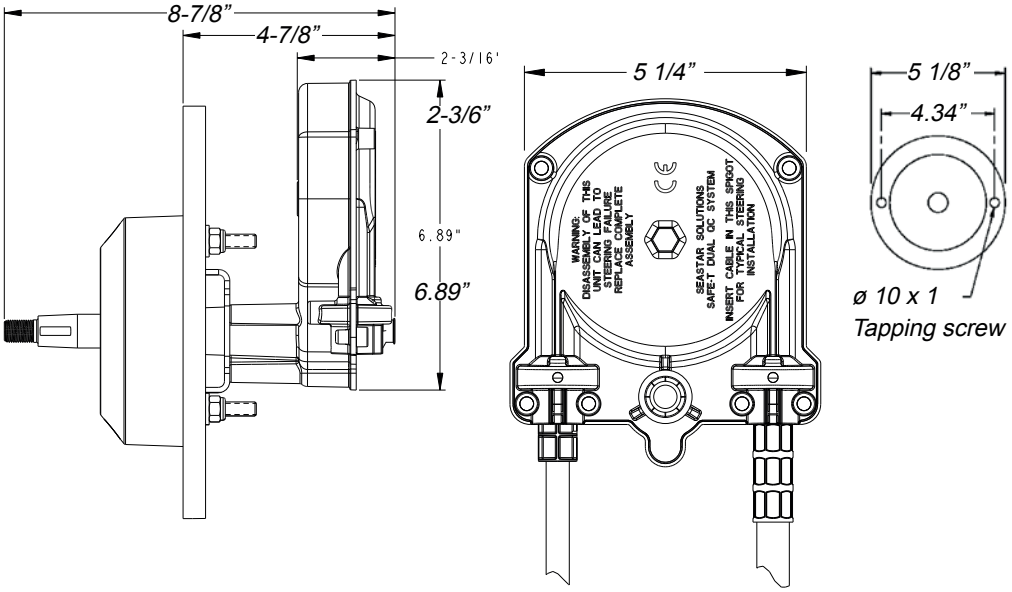

Issue Date - Nov 2014
Issue Number - ms10